E285 CARTRIDGE

Assembly Instructions

E285

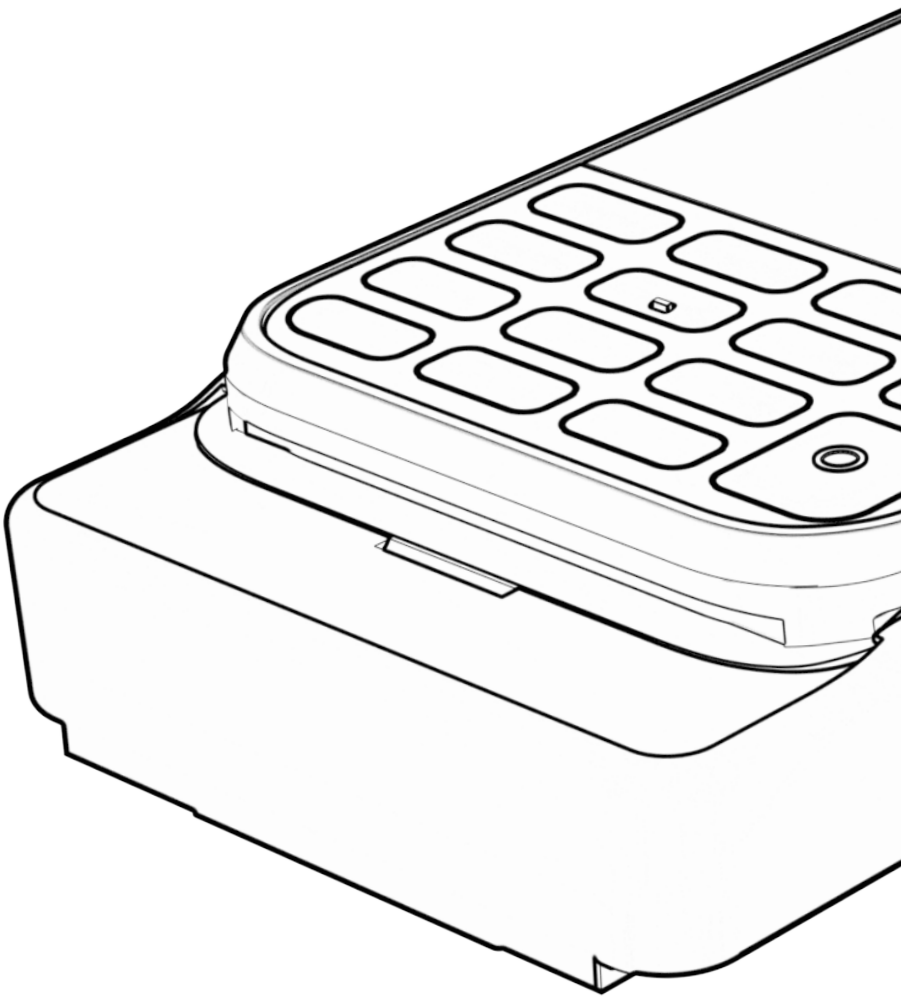

Rev A

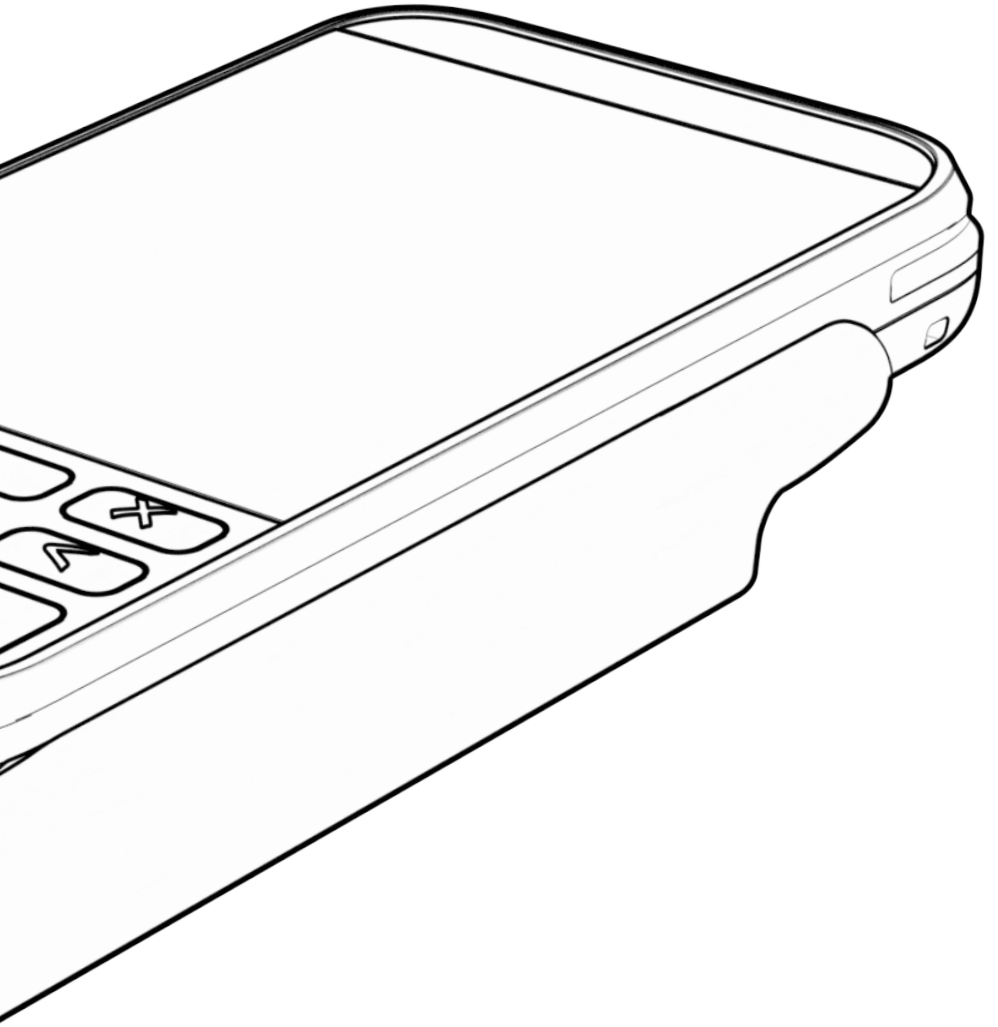

CNX2-E285

CONTENTS

What's Included 1
Assembly 3
Disassembly 11

WHAT'S INCLUDED

D:1

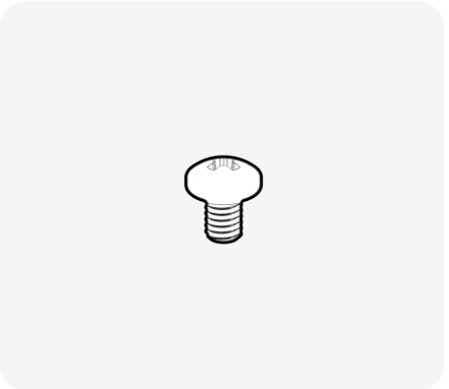

Cartridge Screw
M3 x .5 x 4mm (1)

D:2

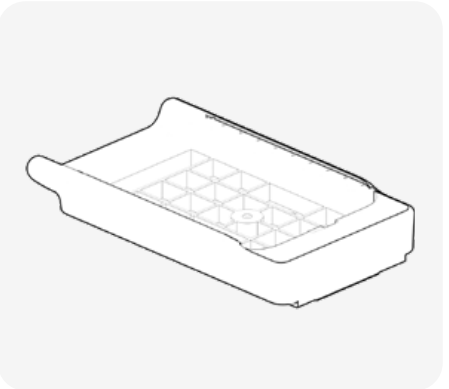

Cartridge Body
(1)

ASSEMBLY

1 Remove the Screw (D:1) from the included baggy.

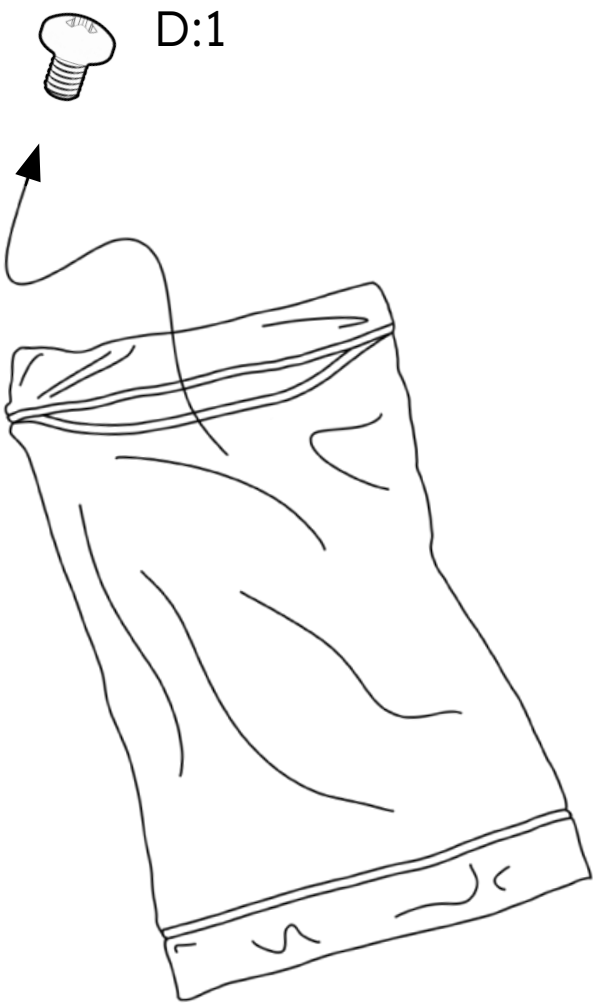

ASSEMBLY

2 Slide the E285 in the Cartridge Body (D:2).

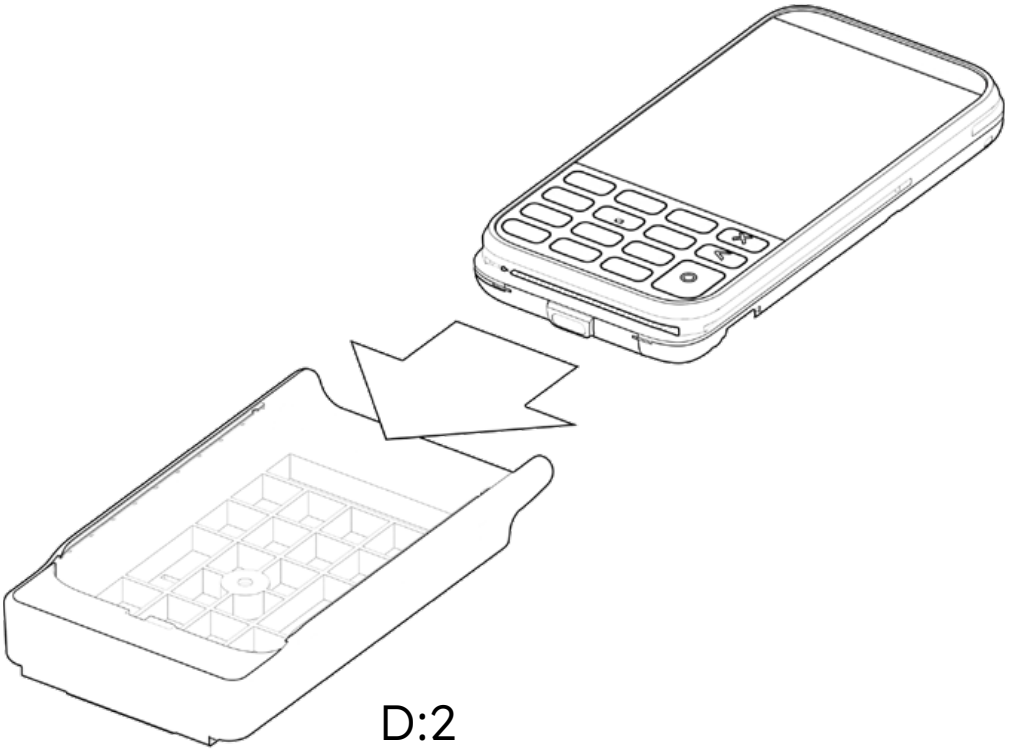

3 Screw the E285 to the Cartridge Body (D:2).

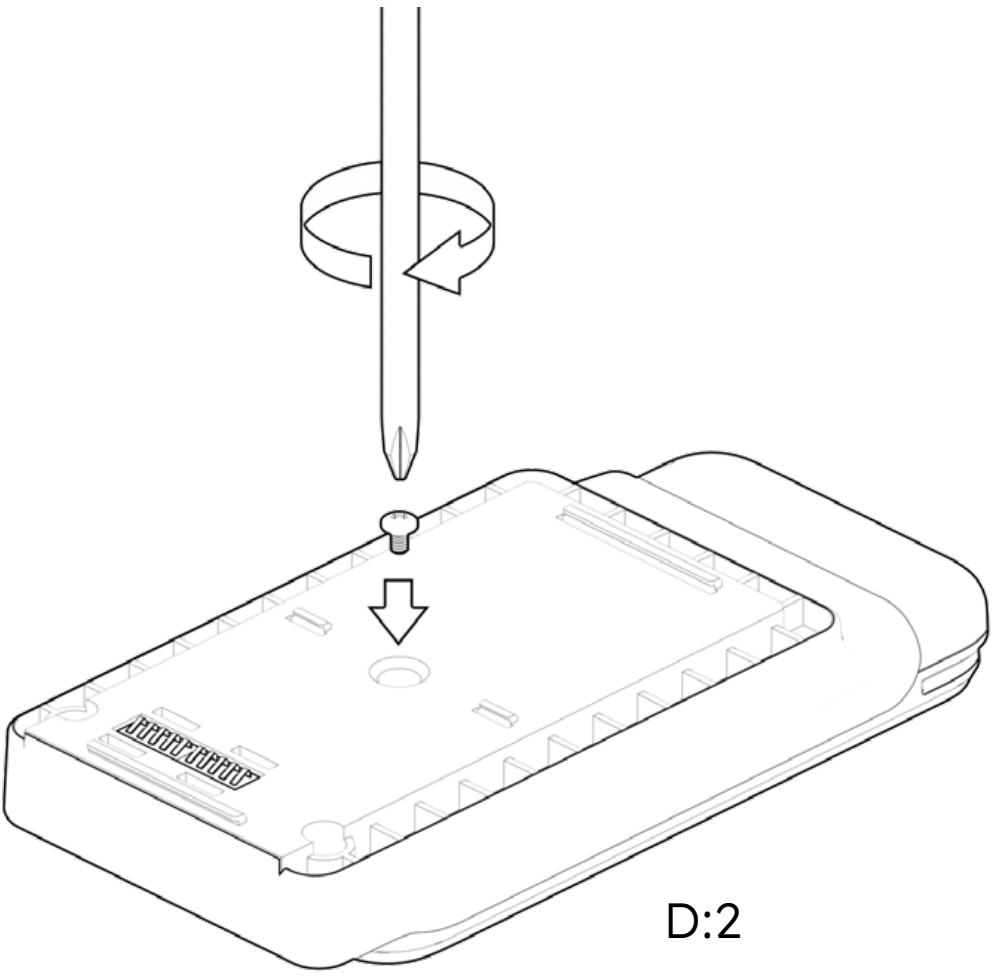

ASSEMBLY

4

Push on the back of the NOCC plate (E) while lifting the front to remove it from the Sled (B).

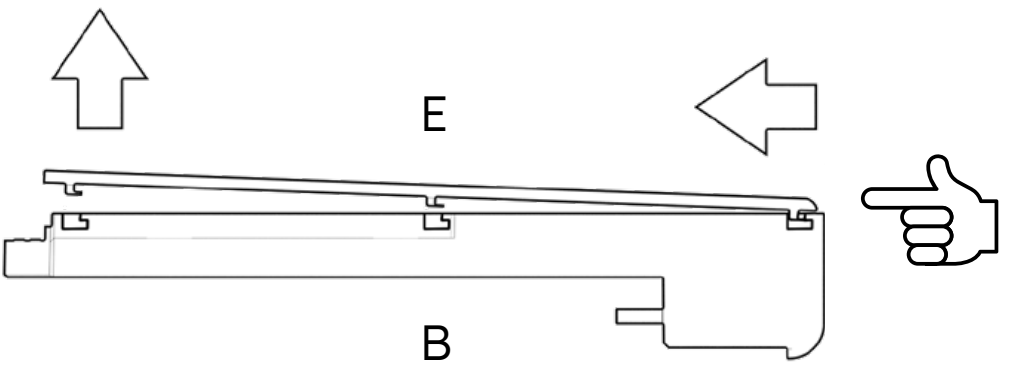

5

Place the feet of the Cartridge Body (D:2) straight down into the slots on the Sled (B) top.

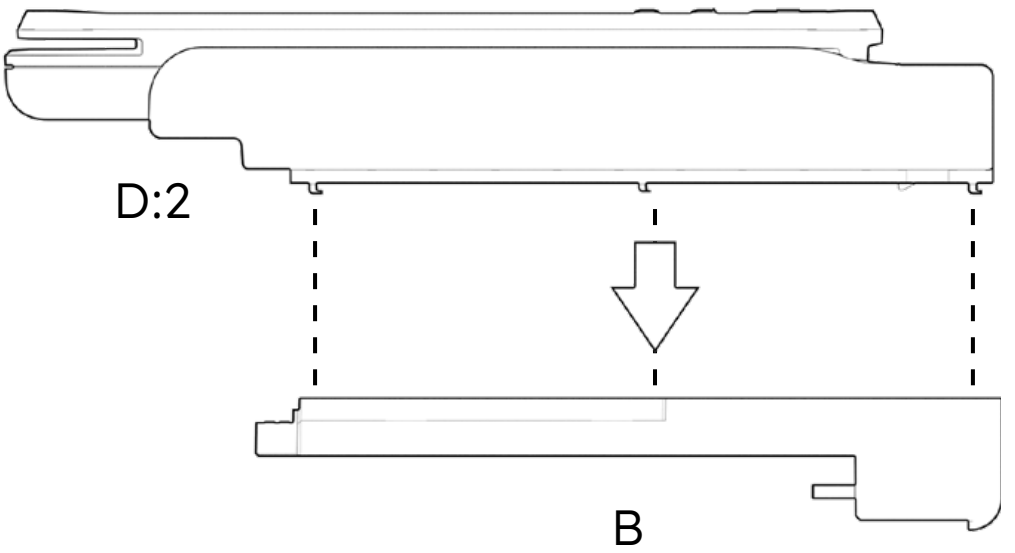

6

Push on the front of the e285 Cartridge until you feel a click.

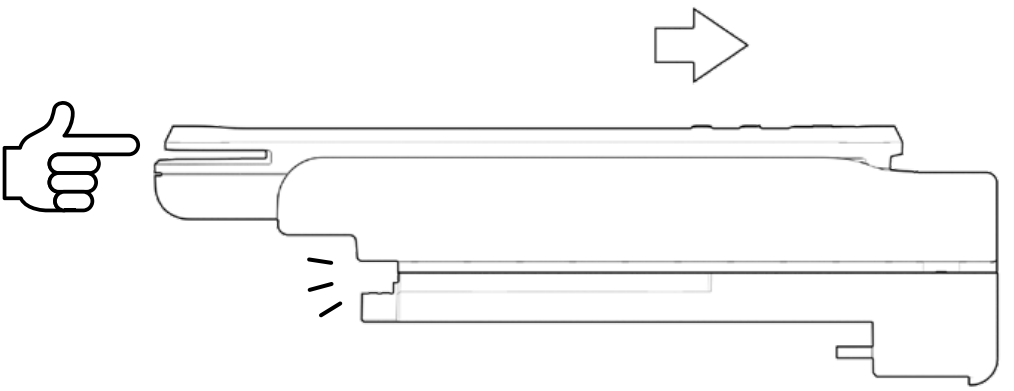

Attention

To continue the assembly process, please refer to the Get Started instruction booklet.

Attention

DISASSEMBLY

Attention

Please refer to the Get Started instruction booklet to begin disassembly.

Attention

DISASSEMBLY

1 Push on the back of the Reader Cartridge until you feel a click.

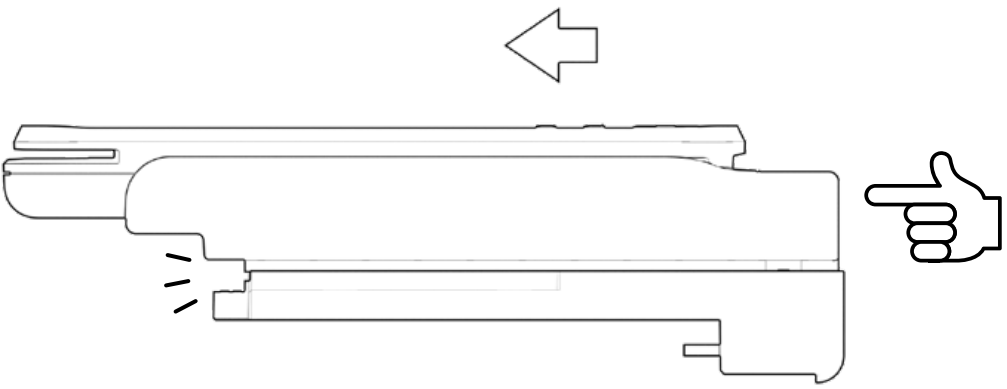

2 Pull the Reader Cartridge straight up to release.

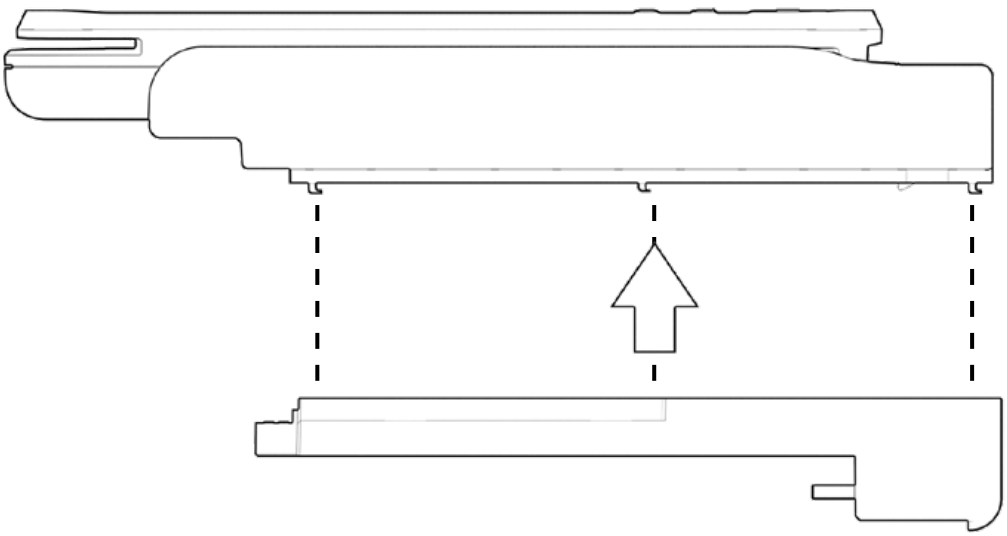

DISASSEMBLY

3 Remove the Screw (D:1) from the Cartridge Body (D:2).

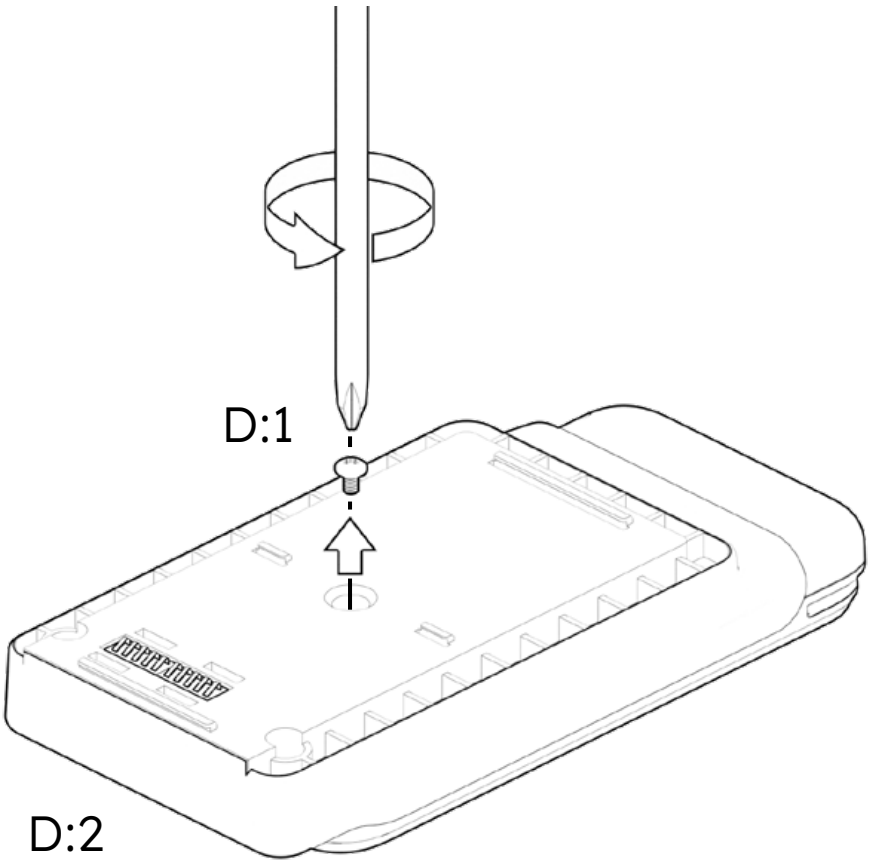

4 Slide the E285 out of the Cartridge Body (D:2).

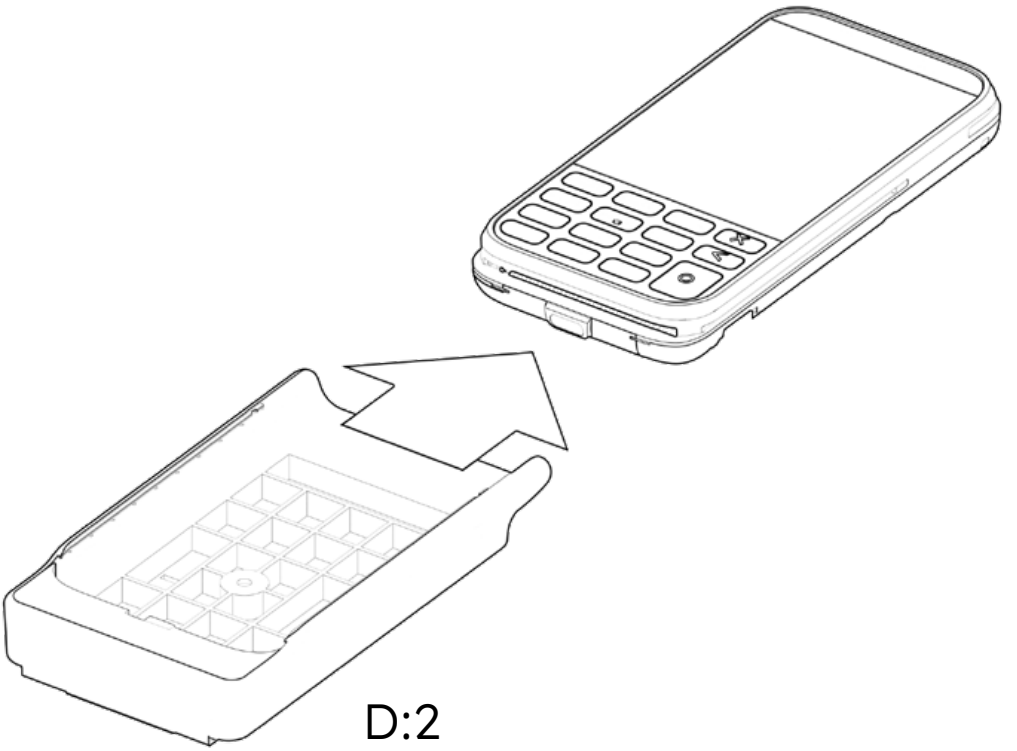

Disassembly Complete

V